Piston Bottom Outlet Valves

KOLBENVENTILE

SchuFI FETTEROLF

SchuF Fetterolf Ram Valves with Customisable Seat

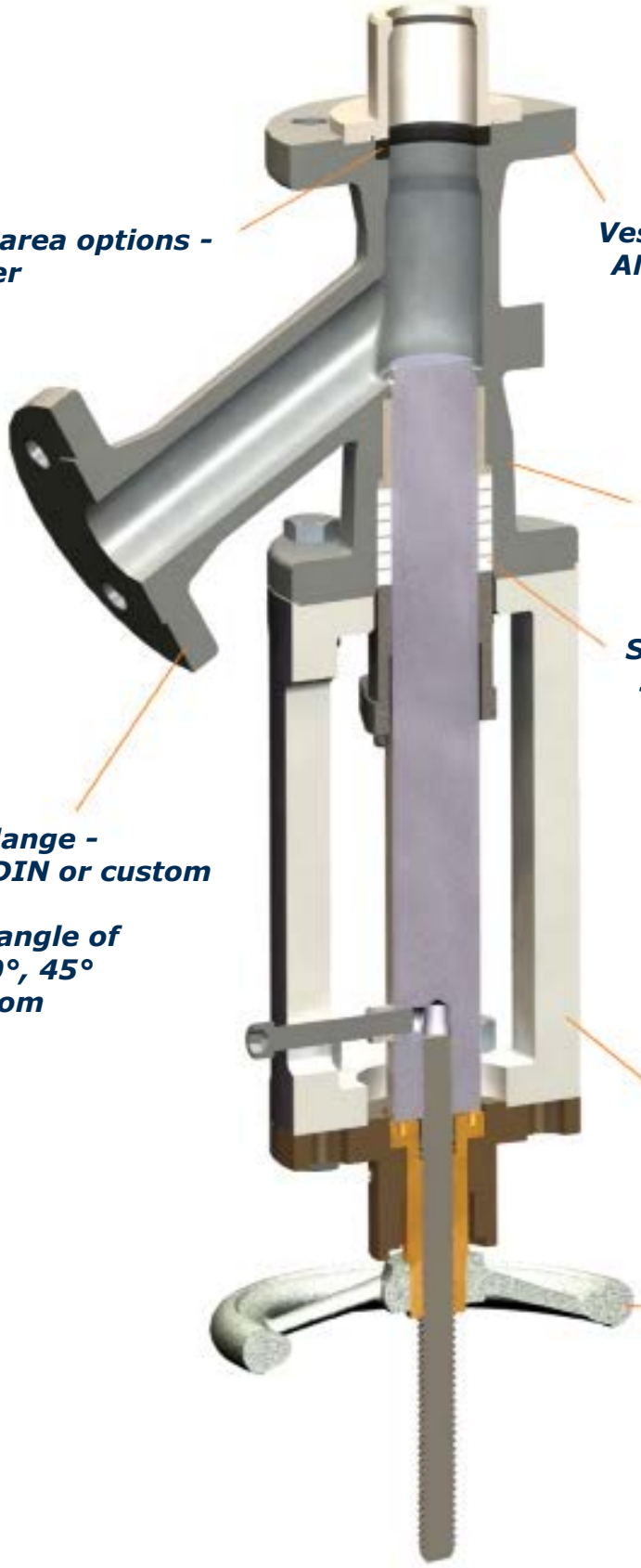

Ram Valves are used when full flow is essential to drain reactors and vessels, flush pipelines, inject media such as kill gases and catalysts and take large samples.

SchuF Fetterolf offers the widest range of design and sealing arrangements for every application. Please contact one of our offices or local agents for advice.

SchuF Fetterolf Ram Valves with Customisable Seat - Options

Sealing Method Options

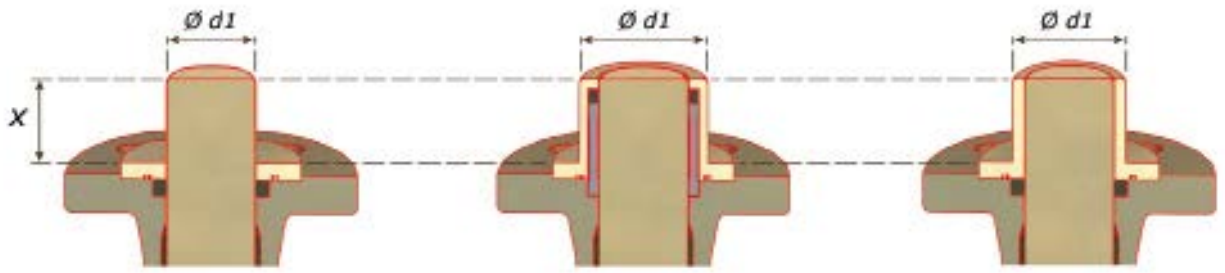

Type 28KV
Soft seal in the valve body

Type 28KR
Soft seal in the vessel

Type 28KV-E
Soft seal in the valve body with extended sleeve

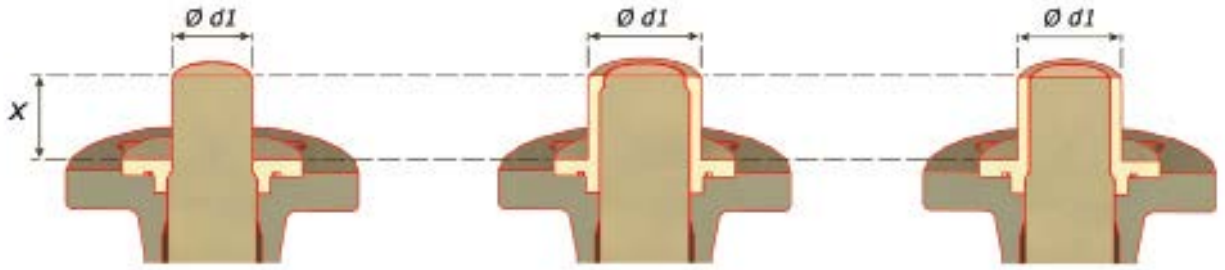

Type 28KX
Metal seal in the valve body

Type 28KS
Metal seal in the vessel

Type 28KX-E
Metal seal in the valve body with extended sleeve

Valve Seal to Atmosphere Options

Packing rings are tightened with the stuffing-box gland to give a radial seal to atmosphere around the ram.

Packing rings can be ordered in PTFE or graphite (high temperature / FIRE SAFE) forms or even in a mix of both.

More specialized packing arrangements are available, including Chevron/PTFE and Garlock/Graphite sealing sets.

Valve Materials of Construction

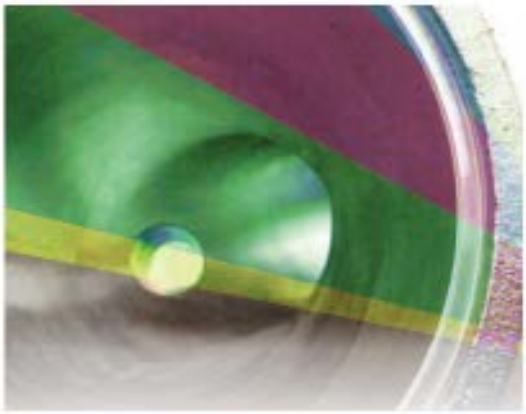

SchuF Fetterolf valves are available in many different materials to suit the customer and the process. The valve bodies and trim can be supplied in stainless steel, carbon steel, Hastelloy, Inconel, nickel or titanium.

Internal lining can be supplied in PTFE, PFA, rubber or glass. Surfaces can also be ordered with specific coating: Stelliting, titanium-nitriding, Canadizing, Kolsterising, chrome-plating and others.

SchuF FETTEROLF

SchuF Fetterolf Ram Valves with Integrated Seat

Ram-Seal® Valve
Type 28FS

Rod-Seal® Valve
Type 26FR

SchuF Fetterolf Ram Valves with Integrated Seat - Options

Ram-Seal® Valve Sealing Method Options -
Sealing ring: Ti or TFE

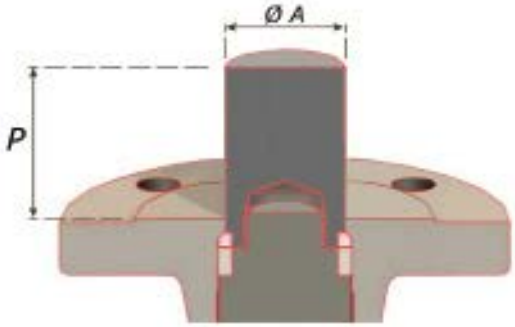

Type 28FX
Extended Plunger

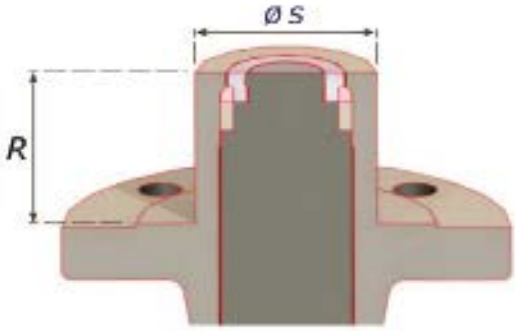

Type 28FS
Extended Body

Rod-Seal® Valve Sealing Method Options -
Sealing ring: plain or encapsulated

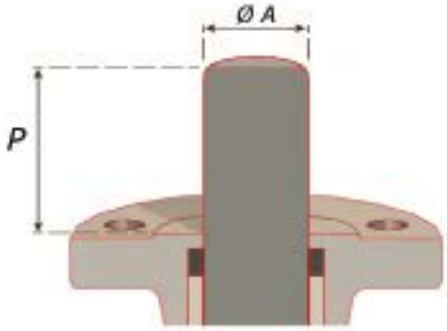

Type 26FV
Extended Plunger

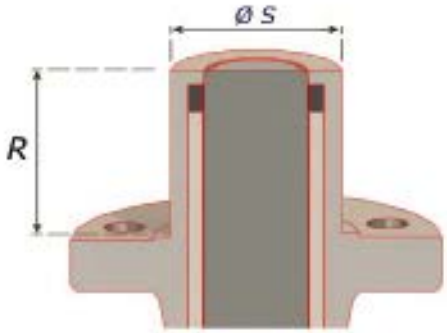

Type 26FR
Extended Body

Ram-Seal® Valve Sealing to Atmosphere - Options

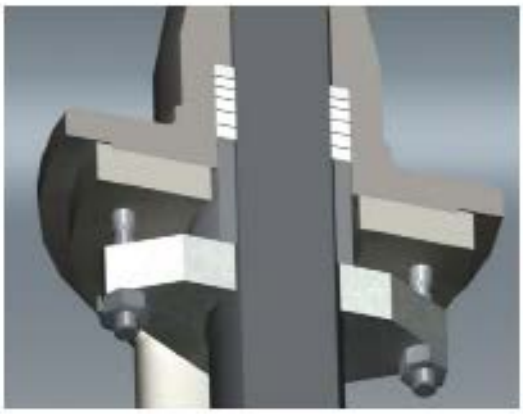

Rod-Seal® Valve Sealing to Atmosphere - Super Closure

Ram-Seal® valves use packing rings for sealing to atmosphere. The packing rings are tightened using the stuffing-box gland to give a radial seal to atmosphere around the ram. Packing rings can be ordered in TVE/KEV or Graphite (suitable for high temperature or FIRE SAFE operation) or even in a mix of both. More specialized packing arrangements are available, including Chevron PTFE or Garlock graphite sealing sets.

Rod-Seal® valves offer the unique Super Closure feature. A cross-head component, mounted at the end of the ram, compresses the stuffing-box gland only when the valve is fully closed. Thus, all the forces of actuation are carried by the guide bush to the packing rings and the radial seal at the top of the valve. This increased closing power ensures a tight shut-off to the process and the atmosphere. This sealing force eases when opening the valve.

SchuF FETTEROLF

SchuF Fetterolf Ram Valve Actuation - Options

Pneumatic Diaphragm (short stroke) Actuator

Valve Body

Manual Actuator

Manual Bevel-Gear Actuator

Hydraulic Actuator

Pneumatic Piston (long stroke) Actuator

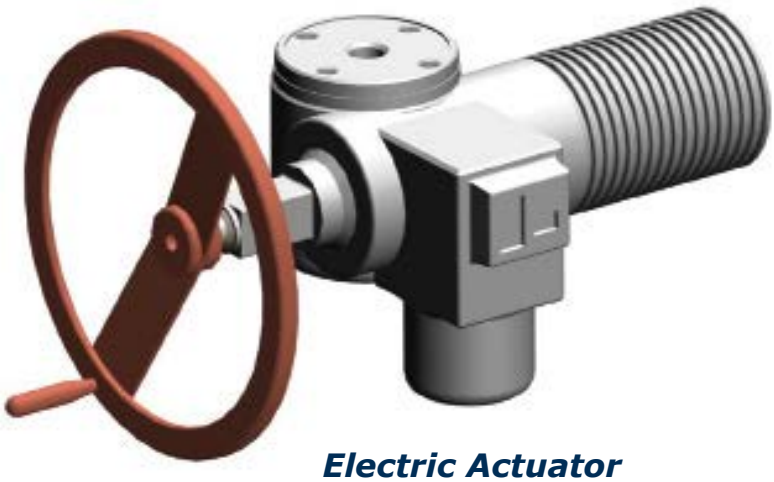

Electric Actuator

SchuF Fetterolf Valves can be supplied with all options shown and later retrofitted to suit. For example, upgrading from a manual to a pneumatic actuator.

SchuF Fetterolf Ram Valve with Accessories

In addition to the features shown SchuF Fetterolf can offer the following options:

- *Jacketing*
- *Temperature Sensoring*
- *FIRE SAFE Certification*
- *FDA Compliant Materials*
- *Flushing / Purging Connections*
- *Internally / Externally Polished*
- *Hard Facings*
- *Contoured Rams*

SchuF FETTEROLF

SchuF Worldwide

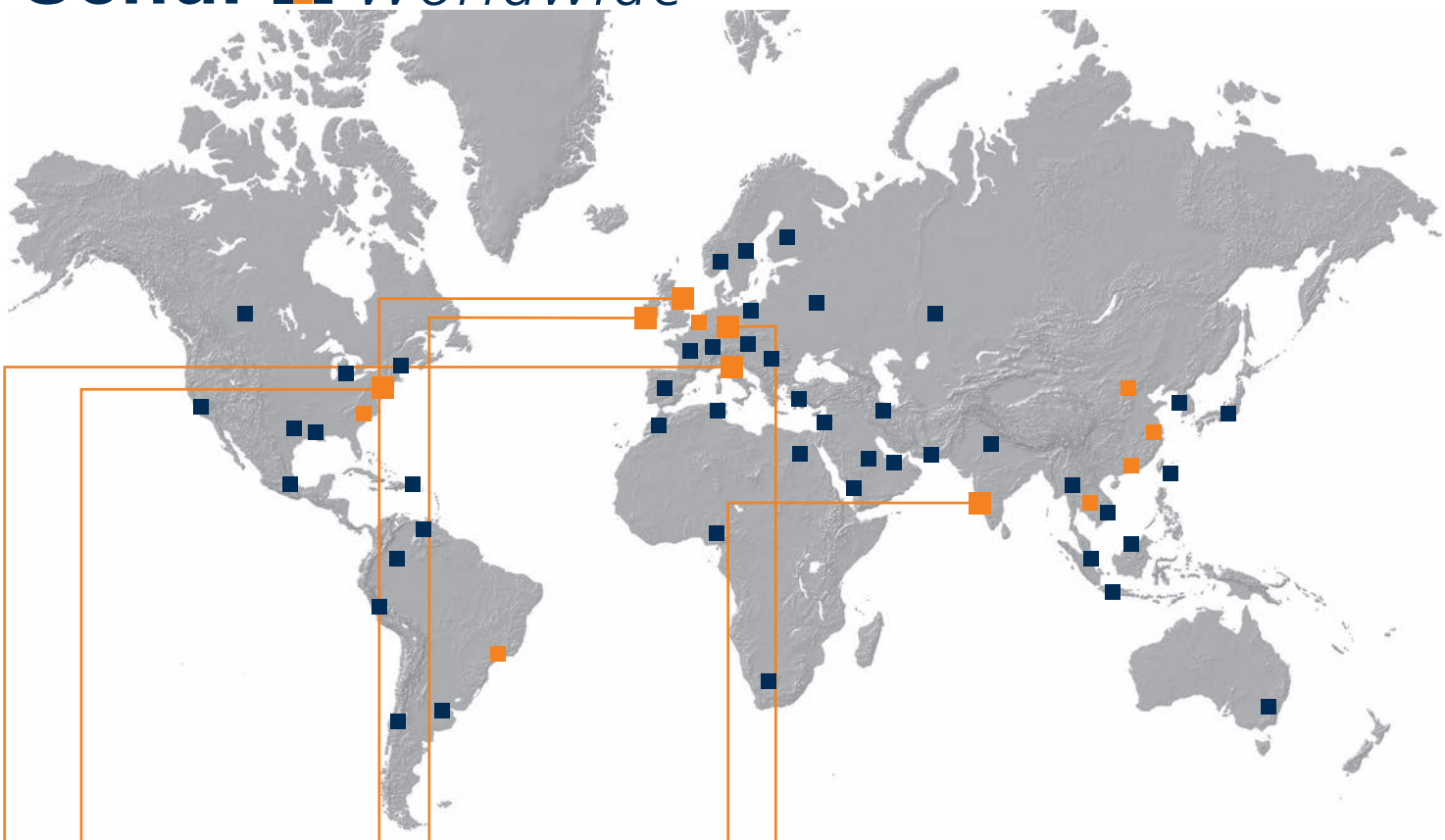

www.schuf.com · www.schuf.de

USA

Fetterolf Corporation
phone: +1 610 584-1500
info@fetterolfvalves.com

SchuF (USA) Inc.
phone: +1 843 881 3345
sales@schuf.us

IRELAND

SchuF Valve Technology GmbH
phone: +353 (0)21 4837000
sales@schuf.ie

GERMANY

SchuF Chemieventile Vertriebs GmbH & Co.KG
phone: +49 (0)6198 571 100
verkauf@schuf.de

Your Sales Channel:

SchuF Benelux B.V.
phone +31 25 12 34 448
lieke@schuf.nl

Emartins Armaturen – ME
phone: +55 19 98013503
emartins@schuf.com

SchuF South East Asia Pte. Ltd.
phone +31 62062 6664
marius@schuf.nl

SchuF Valves China Ltd.
phone +85 22 86 50 86 1
see@vol.net

ITALY

La Tecnovalvo S.r.l.
phone: +39 023503508
info@latecnovalvo.com

UNITED KINGDOM

SchuF (UK) Ltd.
phone: +44 203 355 2012
sales@schuf.co.uk

INDIA

SchuF Speciality Valves India Pvt. Ltd.
phone: +91 421 2264600
sales@schuf-india.com

Your Local Agent: